VRMSTRUCTURES

Manufacturing Company



VRM STRUCTURES INDIA PRIVATE LIMITED

MAKE IN INDIA

ISO 9001 CERTIFIED

mms@vrmstructures.in | www.vrmstructures.in

+91 98843 30789

VRM STRUCTURES INDIA PVT LTD

- Manufacturer of **high-quality solar module mounting structures** for rooftop and ground-mounted projects.
- Offering **customized and engineered solutions** for sheet roofs, RCC, and elevated structures.
- Specializing in **Hot Dip Galvanized (HDG) structures** with long-lasting corrosion resistance.
- **Non-penetrative mounting systems** to protect roof integrity and ensure leak-proof performance.
- Manufacturing **FRP walkways, earthing kits, lightning arrestors, along with solar accessories** as a one-stop solution.
- Ensuring **faster delivery, on-site support, and cost-effective solutions** trusted by top EPCs across India.
- Backed by an **experienced in-house design and fabrication team** for efficient project execution.
- Committed to **quality, reliability, and long-term partnerships** that drive customer satisfaction.



OUR FACILITIES











RCC FLAT ROOF MMS



1 ROW MODEL - HDG STRUCTURE



2 ROW MODEL - HDG STRUCTURE

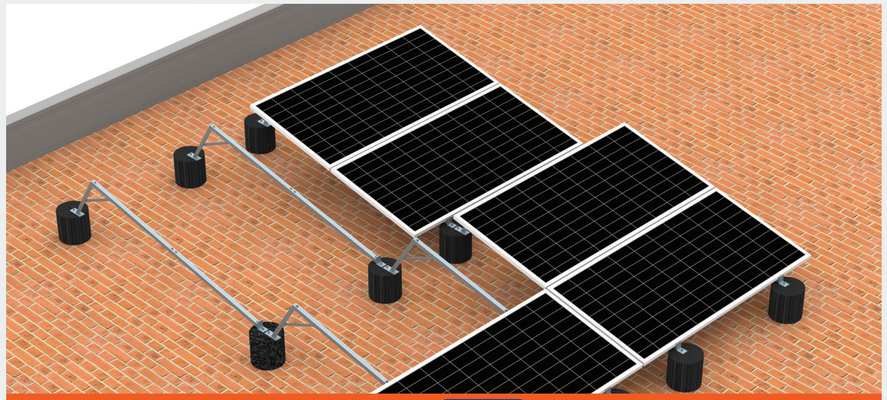

ANGLE BALLAST HDG STRUCTURE
LANDSCAPE ORIENTATION

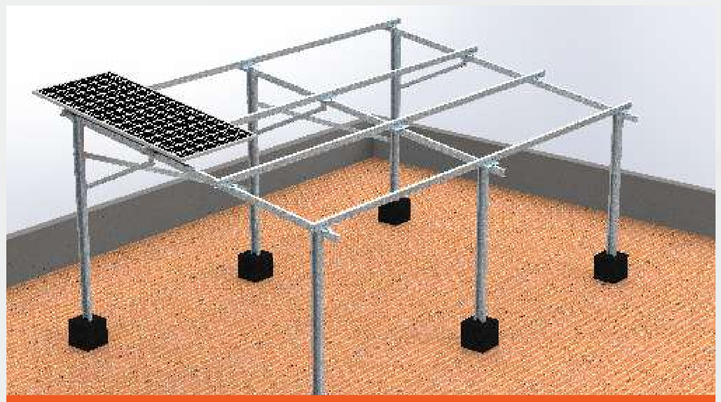

ELEVATED - HDG STRUCTURE



CUSTOMIZED - HDG STRUCTURE

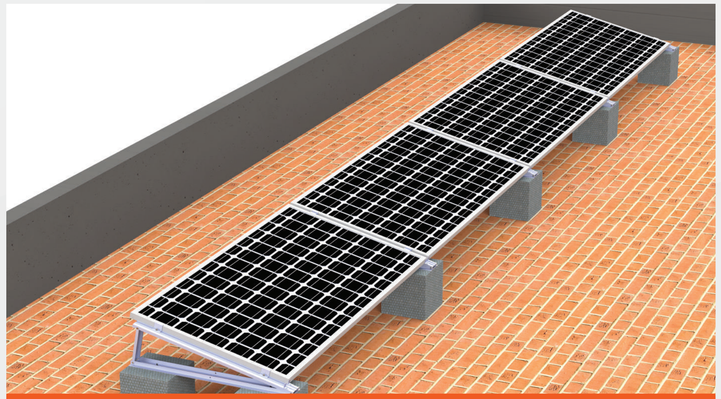

1M ALUMINIUM BALLAST STRUCTURE
LANDSCAPE ORIENTATION



2M ALUMINIUM BALLAST STRUCTURE
PORTRAIT ORIENTATION

GALVANIZING STANDARDS

IS4759:1996 Hot Dip Galvanizing (Maintained 650 GSM (80-90 µm) as per MNRE Standard).

MATERIAL STANDARDS

650GSM Hot Dip Galvanized (YS=240,350Mpa)
150GSM GALVALUME (JSW make) (YS=550Mpa)
120GSM Pre Galvanized (YS=240Mpa)

AVAILABLE SECTION RANGE

C Lip Channels: (Web=60-120mm, Flange=35-50mm, Lip=10-20mm)
L Angles: (Equal Angles Range from 20mm to 50mm)
U Channels: (Web=50-70mm, Flange =20-30)
GALVALUME **Top HAT** Sections-(Web=60/80/100mm, Top Flange=40mm, Base Flange=25mm, Lip=10mm)

ROOF TOP MMS

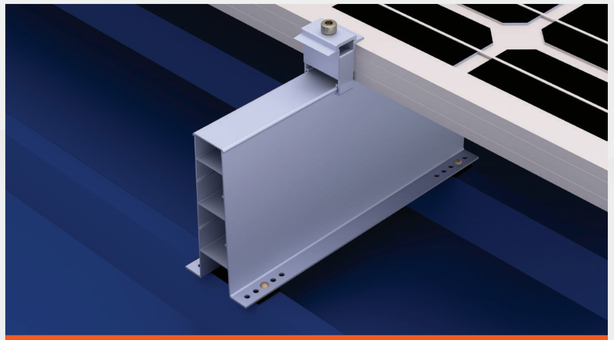

MINI RAIL 150 MM

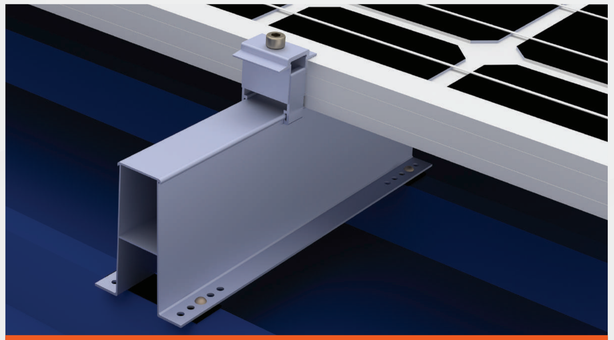

MINI RAIL 100 MM

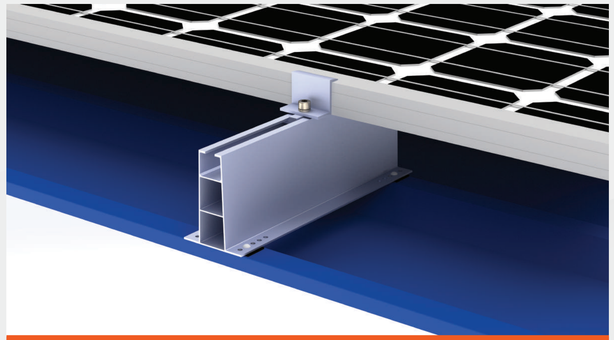

MINI RAIL 100 MM



MINI RAIL 65 MM

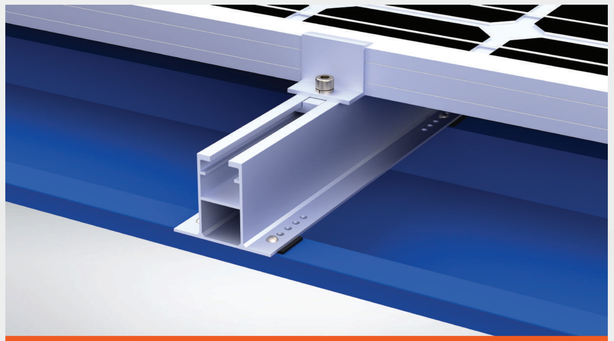

MINI RAIL 60 MM

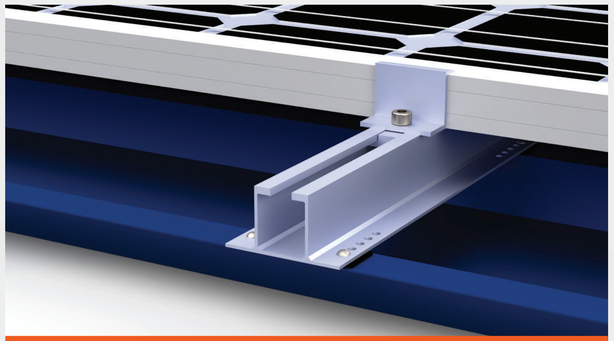

MINI RAIL 40 MM

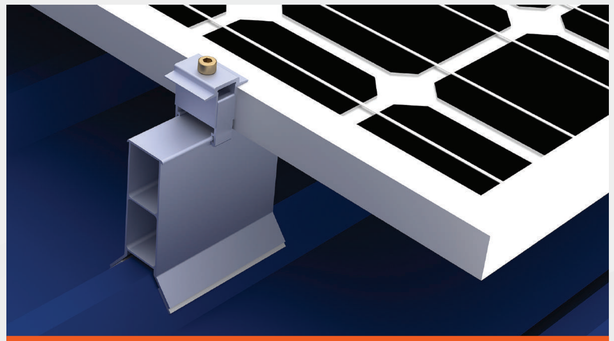

120 MM LANDSCAPE RAIL

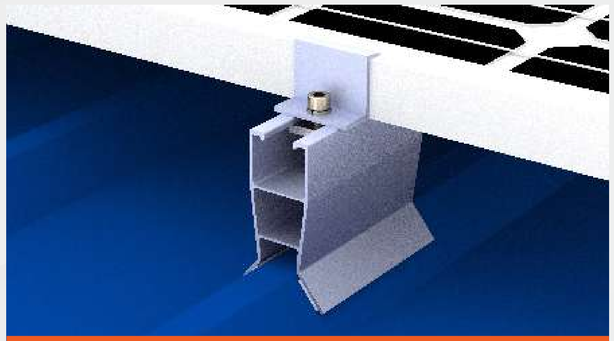

100 MM LANDSCAPE RAIL

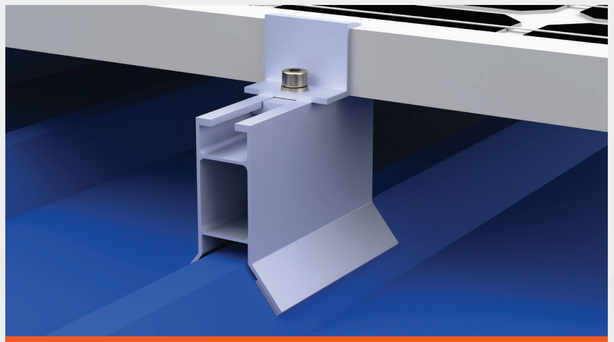

90 MM LANDSCAPE RAIL

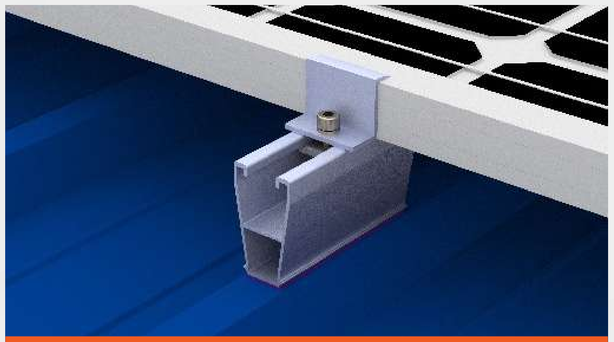

70MM LANDSCAPE RAIL

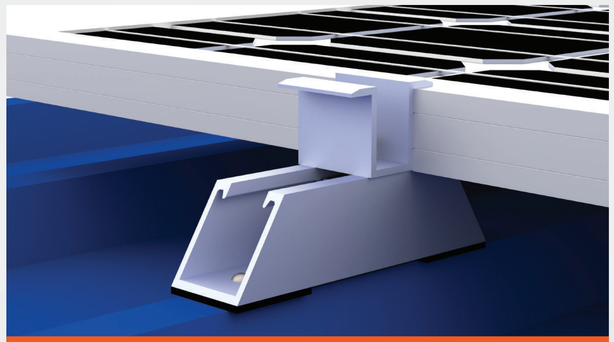

ANGLE SHORT RAIL

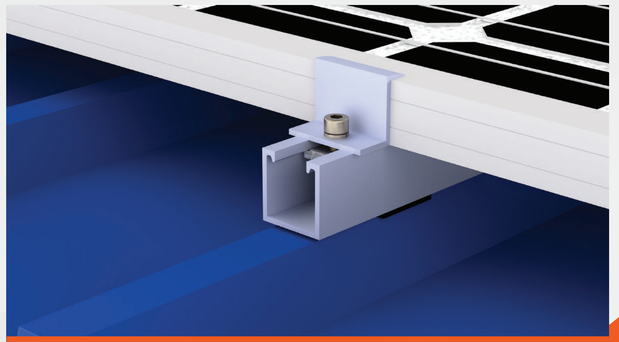

STRUT SHORT RAIL

ROOF TOP MMS - ALUMINIUM 6063 T6

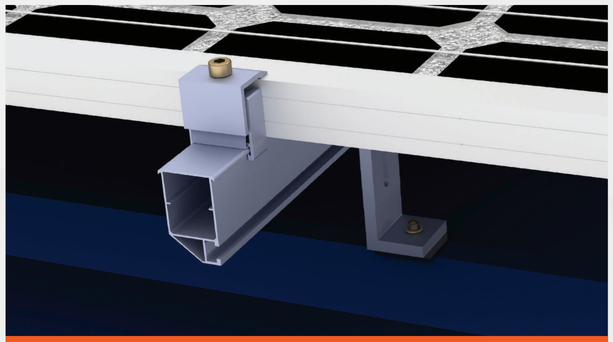

55MM DOUBLE C LONG RAIL



45MM DOUBLE C LONG RAIL

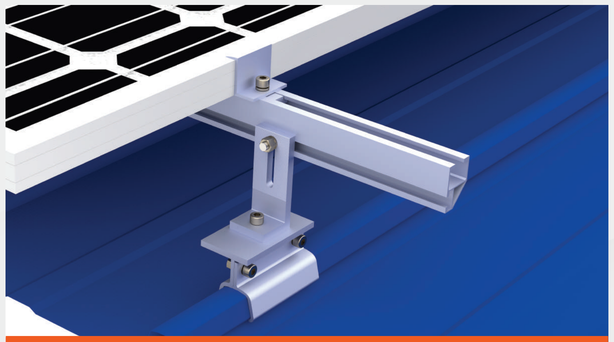

KLIP LOK LONG RAIL



STRUT RAIL

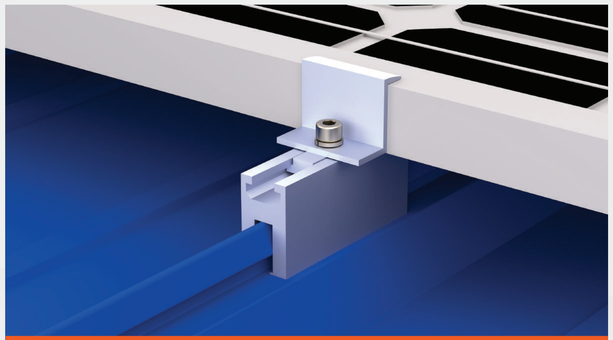

50 MM STANDING SEAM

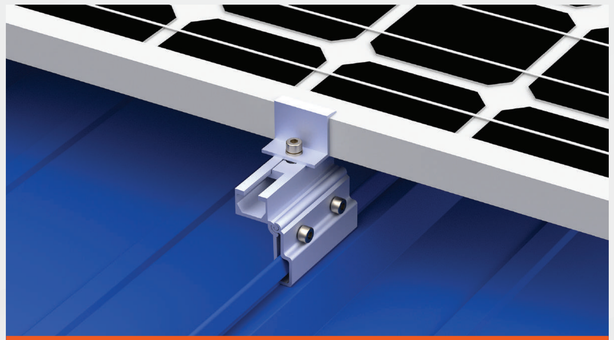

75 MM STANDING SEAM

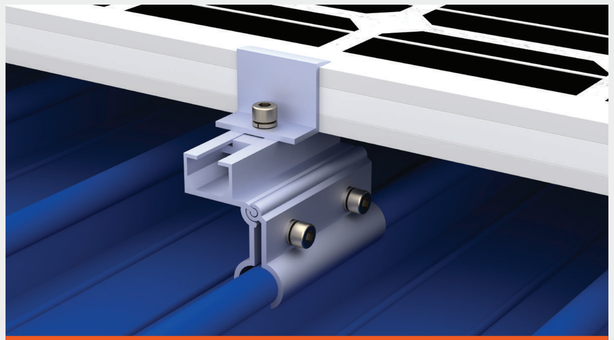

KAL-ZIP RAIL

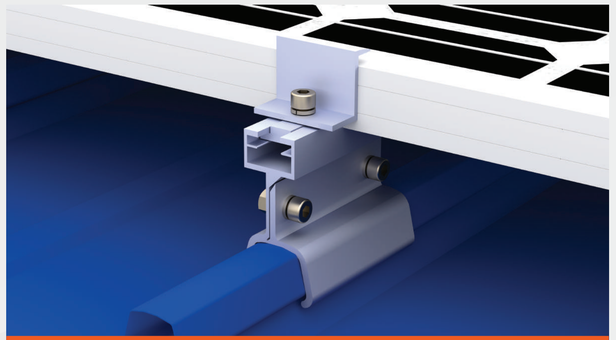

KLIP LOK SHORT RAIL

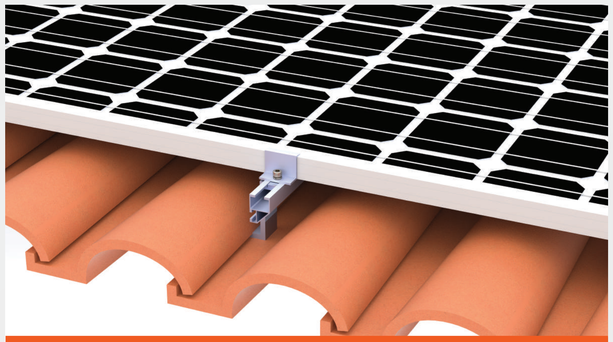

TILE ROOF - LONG RAIL

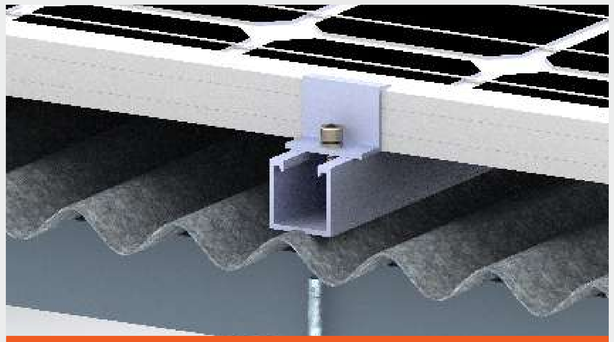

ASBESTOS ROOF - LONG RAIL



2M REVERSE TILT - EAST WEST SLOPE



2M REVERSE TILT - NORTH SLOPE

In addition, all the profiles shall be anodized based on customer requirements maintained with a Dry film thickness of 8-10 microns.

TEST CERTIFICATES & REPORTS

All Structures are designed with Approved FEA and STAAD Pro Analysis to pass Wind Speed of 47 m/s

MOUNTING METHODS

Penetrative (Rivets/SelfTapping Screw) & Non Penetrative (Parker's Lord Acrylic Adhesive Material)

GROUND MOUNT MMS

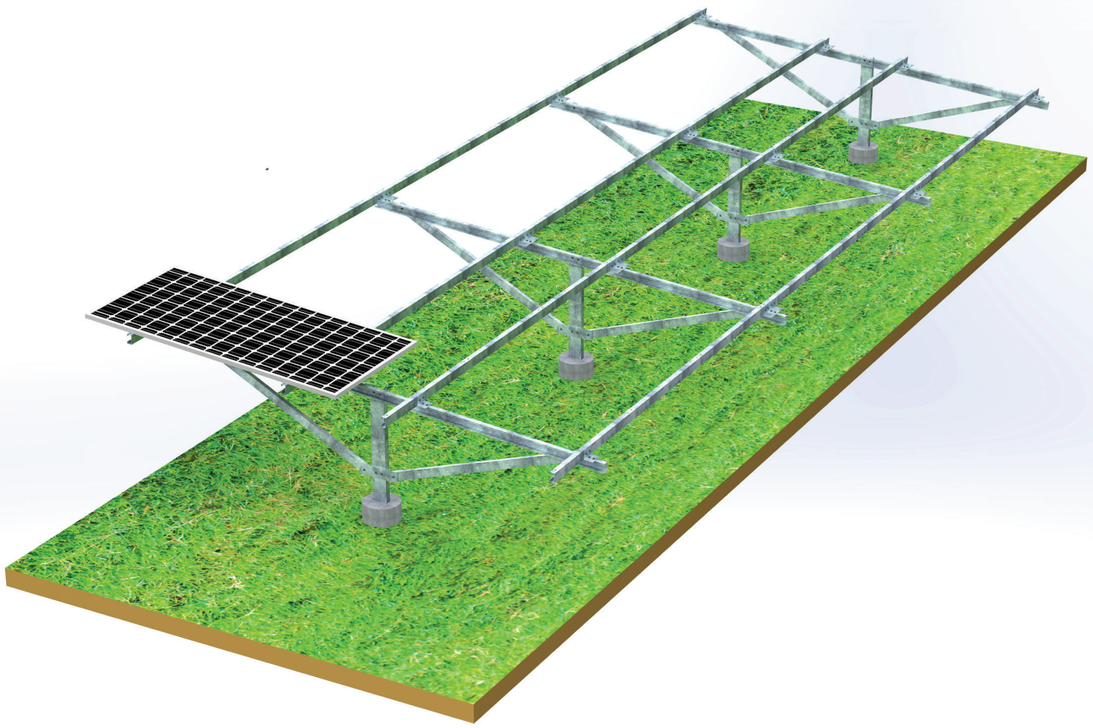

GROUND MOUNT - HDG STRUCTURE

Ground Mount MMS: (STRUCTURE SPECIFICATION)

- Hot Dip Galvanized (**80-90** Microns) / **150GSM** Galvalume Material.
- Pile depth should be 1.5 Meter.
- Profile Used - **C Lip** Channels / **Top HAT** Section.
- Table Matrix - **2 ROW** (Portrait Orientation).

CARPORT MMS

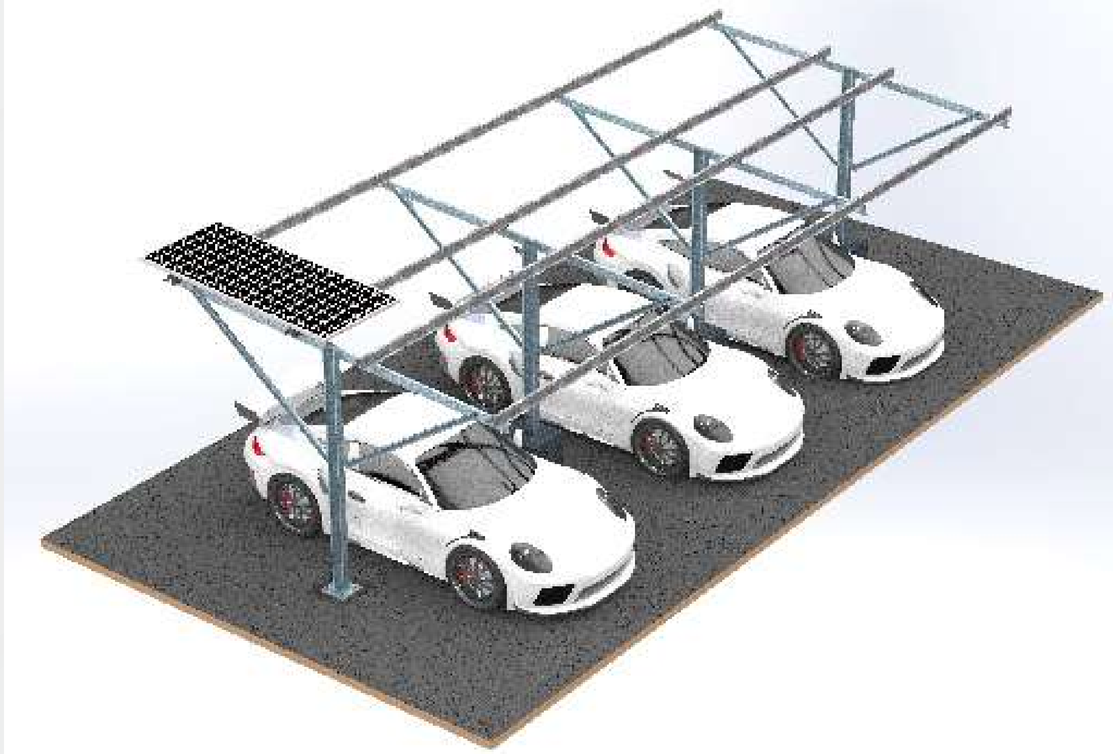

CARPORT - HDG STRUCTURE

Carport MMS: (STRUCTURE SPECIFICATION)

- Hot Dip Galvanized (**80-90** Microns) / **150GSM** Galvalume Material.
- Pile depth should be 2 Meter.
- Profile Used - **SHS** Pipe / **RHS** Pipe / **C Lip** Channels / **Top HAT** Section.
- Table Matrix - **2 ROW** / **3 ROW** (Portrait Orientation).

FRP WALKWAY & HAND-RAIL

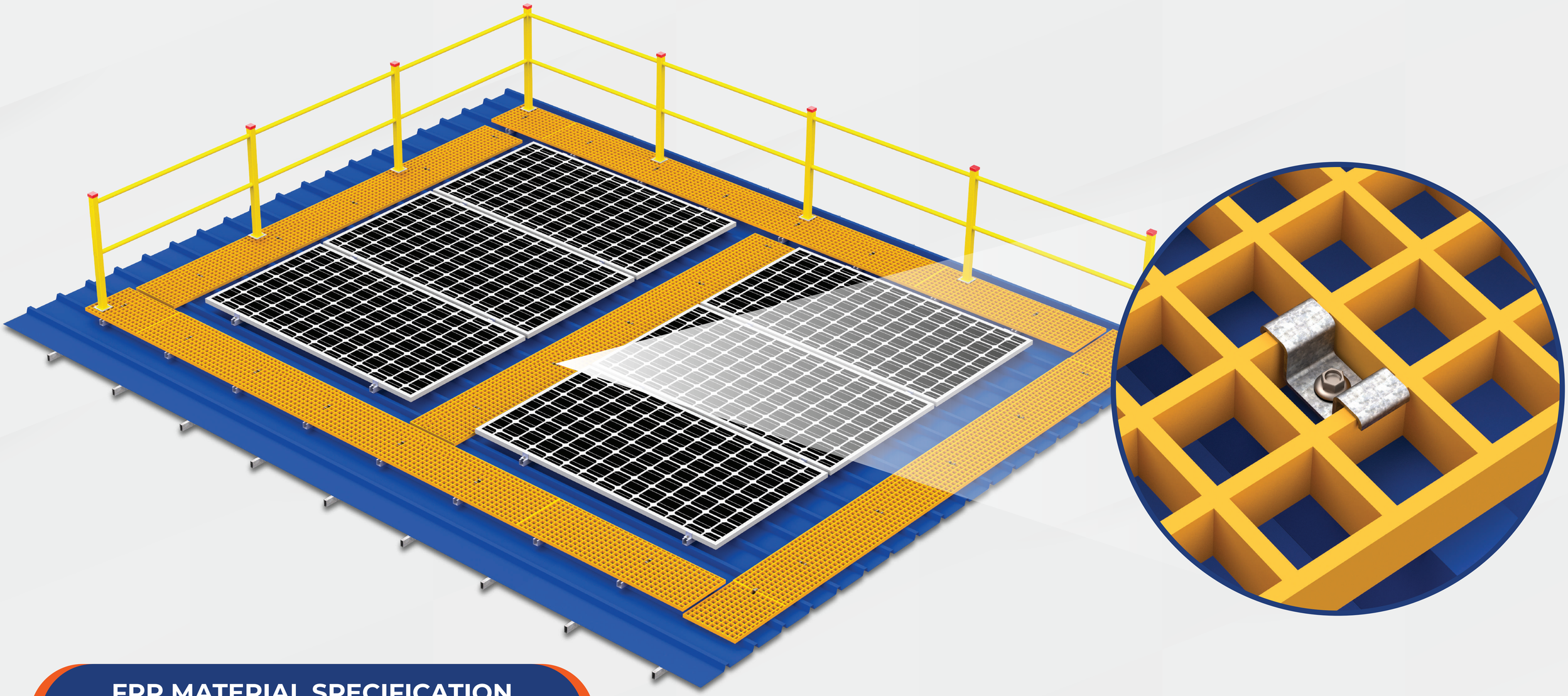

FRP MATERIAL SPECIFICATION

- Corrosion free material with 35% Glass content.
- Made of Glass Fiber Reinforced Polymers (UV protected).
- Excellent Durability with High Tensile Strength.
- Walkway Gratings comes in various Width like **273mm** / **310mm** with **25mm** Height.
- Standard Gratings Lengths - 2000mm / 3660mm.
- Material Supplied more than 250 EPC Solar Contractors over the nation.
- Handrails comes in 750mm / 900mm Hollow Square Pillar provided with “1” Round Pipe with complete accessories.
- Mesh size - **38x38mm** and **38x75mm**.

ACCESSORIES

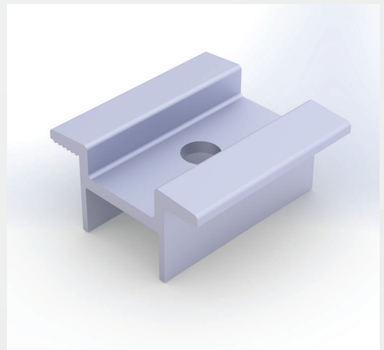

UNIVERSAL MID CLAMP

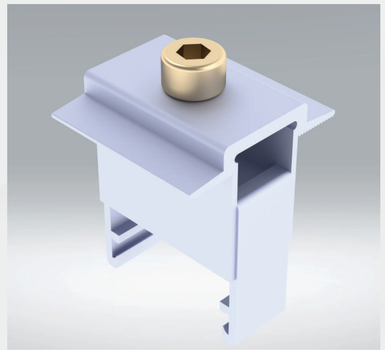

UNIVERSAL MID CLAMP

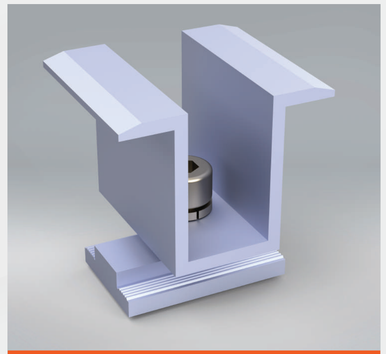

MID CLAMP SET



UNIVERSAL END CLAMP

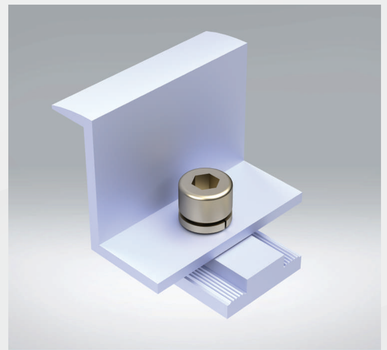

END CLAMP SET

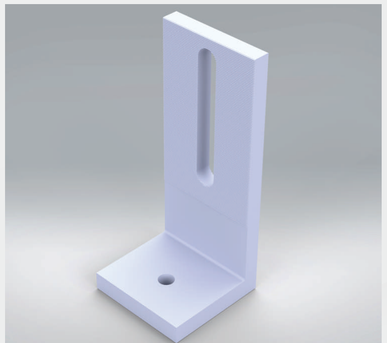

L BRACKET

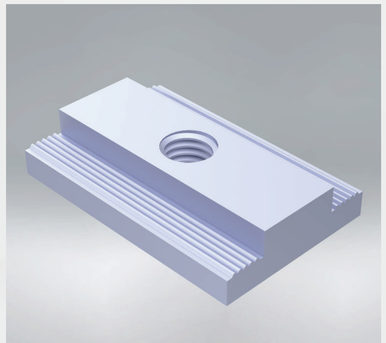

T NUT



SPRING NUT

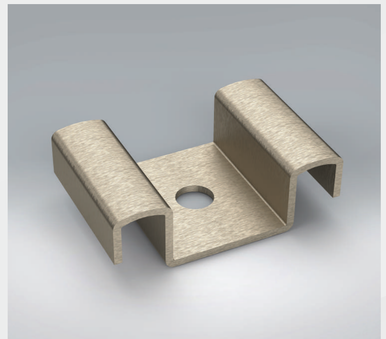

WALKWAY M-CLAMP

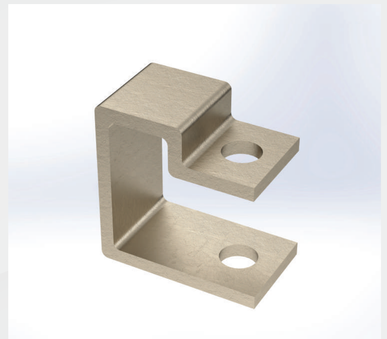

WALKWAY C-CLAMP



LORD ADHESIVES



DISPENSER GUN



EARTH STRIPS



LIGHTNING ARRESTER



EARTH ROD

VRM STRUCTURES INDIA PRIVATE LIMITED

A MANUFACTURING COMPANY

+91 98843 30789 / 044 - 2553 1989

Reach us on

VRMSTRUCTURES

Manufacturing Company



- Complete BOS Supply
- Hassle-Free Procurement
- On-Time Delivery
- Nationwide Service Network
- Expert Technical Assistance
- End-to-End Support

VRMS MaxPack

MAXIMUM VALUE, ALL-IN-ONE

SOLAR MODULES

WAAREE® One with the Sun

adani Power

ReNew POWER

vikramsolar

INVERTERS

POLYCAB IDEAS. CONNECTED.

powering tomorrow Growatt

Deye

MODULE MOUNTING STRUCTURES

VRM STRUCTURES Manufacturing Company

ACDB & DCDB

POLYCAB IDEAS. CONNECTED.

EARTHING COMPONENTS

(Lightning Arrestor, Earth Rods, Chemical Bag, Earth Pit Chamber)

TERRA BOND ENGINEERED FOR ABSOLUTE SAFETY

AC / DC / EARTHING CABLES

POLYCAB India's No. 1 Cable & Wires Company

S No	Description	3KW	5KW
1.	MODULE ADANI | WAREE | RENEW POWER VIKRAM SOLAR	6	10
2.	INVERTER (POLYCAB, GROWATT, DEYE)	1	1
3.	ACDB-DCDB-WITH MCB SPECIFICATION: MCB & SPD L-MAX MAKE (POLYCAB)	1	1
4.	EARTHING KIT - (TERRABOND) LIGHTNING ARRESTER: 1 EARTHROD:3 EARTHPIT CHAMBER: 3 CHEMICAL BAG 10KG: 3	1	1
5.	SUPPLY OF STRUCTURE FOR RCC/HIGH RISE STRUCTURE (VRM STRUCTURES MAKE)	1	1
6.	POLYCAB MAKE - DC CABLE 4 SQ MM RED & BLACK	40	40
7.	POLYCAB MAKE - AC CABLE 4 SQ MM RED & BLACK	40	40
8.	ORBIT MAKE EARTHING CABLE 16 SQ MM GREEN	90	100
9.	MC4 CONNECTOR	2	2
10.	CABLE TIE	1	1
11.	LUGS AND GLANDS	5	5
12.	PVC CABLE TRAY	1	1

From Sunlight to Savings - One Complete Kit.

From Panels to Power - We've Got You Covered.

Full Solar Solution - Delivered in One Shot.

Product images are for reference purposes only.



To get more details, you can reach out

VRMSTRUCTURES
Manufacturing Company

VRM STRUCTURES INDIA PRIVATE LIMITED

+91 98843 30789
+91 98848 30789

No. 1427, GNT Road,
Nagappa Industrial Estate,
Puzhal, Chennai - 600 066.

www.vrmstructures.in

